Contract NO.:

库博能源
CUBENERGY TECHNOLOGY

PowerCombo-20C2H1200K Technical Agreement of Energy Storage System

Party A: XXXXXXXXXXXXXXXXXXXXX

Party B: Shenzhen Cubenergy Co., Ltd

After friendly consultation between Party A and Party B, in line with the principle of sincere cooperation and common development.

The two sides reached the following agreement on PowerCombo-20C2H1200K (1MW/2.064MWh) configuration specification container energy storage system.

1. Principles and overall scope of supply

1.1. Principles

This document is applicable to PowerCombo-20C2H1200K(1MW/2.064MWh)container energy storage system.

The system includes 20-foot standard container, battery system, BESS controller, air conditioning system, Fire fighting system, power conversion system, lighting distribution system and its auxiliary equipment.

Meet the electrical technical requirements in terms of function, installation and other aspects; Party B ensures that the technical nature of the equipment provided can meet the requirements of the agreement.

1.2. Overall scope of supply

The configuration requirements of a 20-foot standard container system in the project are as follows:

Table 1-1 configuration list of main equipment of the system

NO.	Main equipment name	Model/Specification	Qty	unit
I	Battery system			
1	Battery PACK	P14-LF280K-DC1500V Including active balancing BMU, 16 voltage, 6 module temperature, 2 pole temperature. 470(W)*750(D)*243(H)mm	144	Set
2	Battery rack	Including 3 sets of 480(D)*750(W)*2050(H)mm cabinet, galvanized aluminum plate processing, with good heat resistance, corrosion resistance and electrical conductivity,	6	Set
II	Electrical control and distribution system			
1	DC high voltage unit(HVU)	1500V active balancing version, including DC molded case circuit breaker, DC contactor, fuse, battery management unit(CMU), sensor, cooling fan, etc	6	Set
2	BESS Controller	600(W) x280(D) x560(H), Including 1 set of PLC control system, HMI, auxiliary power module, industrial switch socket, terminal block, etc.	1	Set

3	Distribution box DB	1000(W) x400(D) x1000(H), Includes 7 sets of AC plastic case circuit breaker, three-phase bus bar, power switch of secondary equipment, communication terminal of reserved function, etc	1	Set
III	Container and auxiliary system			
1	20ft TEU container	20-foot (6,058(W) x 2,438(D) x 2,591(H) mm) standard container, 50 mm insulation, including reinforced steel. Container appearance LOGO can be customized according to customer requirements.	1	Set
2	Air conditioner	5kW effective cooling power, with dehumidification, support for self-start and remote control, Integrated enclosure design, protection grade IP55.	6	Set
3	Fire fighting system	Including gas cylinder, solenoid valve, release pipe, nozzle, hydrogen, carbon monoxide detector, smoke, temperature detector, gas fire extinguishing controller, acoustic-optic alarm device, emergency start / stop button, etc.、Pressure balancer (pressure relief), air inlet fan, fire exhaust fan, and emergency stop button.fire extinguishing agent can use FM-200 or FK-5-1-12	1	Set
4	Installation and commissioning of equipment inside container	Equipment installation including battery PACK, battery rack, BMS, BESS controller, PCS Modular converter, auxiliary power transformer, fire fighting system, air conditioning system, power distribution in container and auxiliary materials, etc. System factory FAT debugging, report; Packing and delivery according to the contract requirements.	1	Set
IV	Power conversion system			
1	Modular power conversion system	200kW module converter, AC 690Vac output with AC/DC plug, communication harness, waterproof lock and aviation plug	6	Set
V	Non-standard configuration requirements (if any)			

2. Scope of work of both parties

2.1. Scope of work of Party A

Party A shall provide the following equipment and services:

1. Responsible for the foundation of container installation, anchor bolts, grouting and providing labor force and services for container loading, unloading and installation at the project site.
2. Responsible for the external cable wiring and laying of the project container (including external access power cable, grounding, control, communication cable wiring and laying).
3. During the installation, commissioning and operation of the equipment, Party A shall provide convenient working conditions for Party B's on-site service personnel.

2.2. Scope of work of Party B

Party B shall provide the hardware, software and services necessary to meet this technical specification, which mainly include the following:

1. Equipment design, integrated installation, supply, etc.
2. Equipment design liaison meeting, factory test and acceptance (FAT), equipment packaging, transportation, training for Party A's technical personnel, etc.
3. Provide equipment installation guidance, commissioning guidance and sales services within the scope of the contract
4. Provide the necessary spare parts and special tools as stipulated in the scope of the contract.
5. Provide the following two sets of technical documents, mainly including:
   - Design drawings (system diagram, communication drawing, fire fighting equipment wiring diagram, distribution box electric drawing, BESS controller layout, BESS controller electric drawing, terminal wiring diagram, high voltage unit electric drawing, High voltage unit electric drawing, Battery string three-view drawing, etc.).
   - List of container shipping equipment and list of spare parts. (if there is a demand for spare parts)
   - User manual on container products

3. System introduction

3.1. Design description

PowerCombo-20C2H1200K container energy storage system is integrated into a standard 20 foot container. Including multiple sub units such as high-capacity lithium iron phosphate battery, active equalization battery management system, BESS control system, gas fire protection system, environmental control system, modular power conversion system, etc.

3.2. Application scenarios

Installation site: local temperature and humidity?

Operating environment: Land, seaside?

Application scenario: frequency modulation at grid side, charge discharge ratio: 0.5C (Example), voltage and frequency at the project site?

Implementation function:

Dispatching mode: customer EMS directly controls PCS frequency modulation (Example)

Container painting color: RAL7035,

Are LOGO customers customized?

3.3. Equipment design operating conditions

System design magnification	0.58C
Charging operating environment temperature	-10℃~40℃
Discharging operating environment temperature	-10℃~40℃
Operating Humidity	<95%RH, non-condensing
Other environmental conditions	The equipment is installed on the level ground, and the air inlet and outlet are free from foreign matter. There are no high pollutants such as strong acid and alkali that can be adhered to or inhaled by the equipment, and no flammable and explosive air or substances.
Grid connected electrical conditions	The device is connected to the power grid through an external transformer. The transformer specifications and capacity must meet the requirements for device operation
Grid conditions	The power quality at the power grid end meets the local power quality standards

3.4. System characteristics

- Can accept the third party command scheduling, charge and discharge operation;
- The design is compact and saves space. 20ft TEU provides 1MW/2.064MWh capacity;
- DC modular design, can linearly expand the battery unit;
- The AC modular design enables the management of battery string unit 1 string 1;
- Advanced battery management system provides complete measurement and protection functions;
- Fault priority handling mechanism to respond to preset fault scenarios;
- Automatic fault branch exit mechanism to ensure the stable operation of the whole system;
- AC, DC integration, 100% pre-assembly and factory test;
- Plug and play at delivery, low installation, operation and later maintenance costs;
- 690Vac output can be connected to different grids through additional boost transformer cabinets;

3.5. System configuration

The overall configuration of the energy storage system is a 20ft standard container (6,058 D x2,438 W x2,591 H mm), and the system capacity is 1MW/2.064MWh. It mainly includes: 6 S373-24P14 battery string, 2.064MWh battery capacity DC system, 1 set of BESS controller, 1 set of distribution box, 6 sets of 200kW module power conversion systems, 1 set of gas fire fighting system, 1 set of environmental control system, 1 set of 30kVA auxiliary transformer and corresponding power distribution and lighting system, etc. The system layout is as follows:

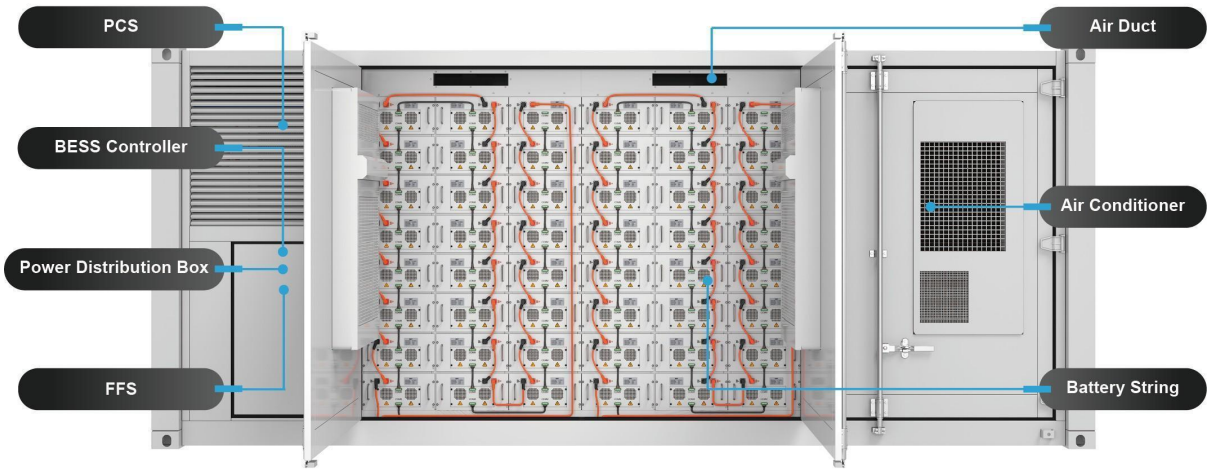

Figure 3-1 Container layout

3.6. Main Circuit Diagram

The system topology is shown in the figure below: (The gray dotted box is the standard supply scope of Party B)

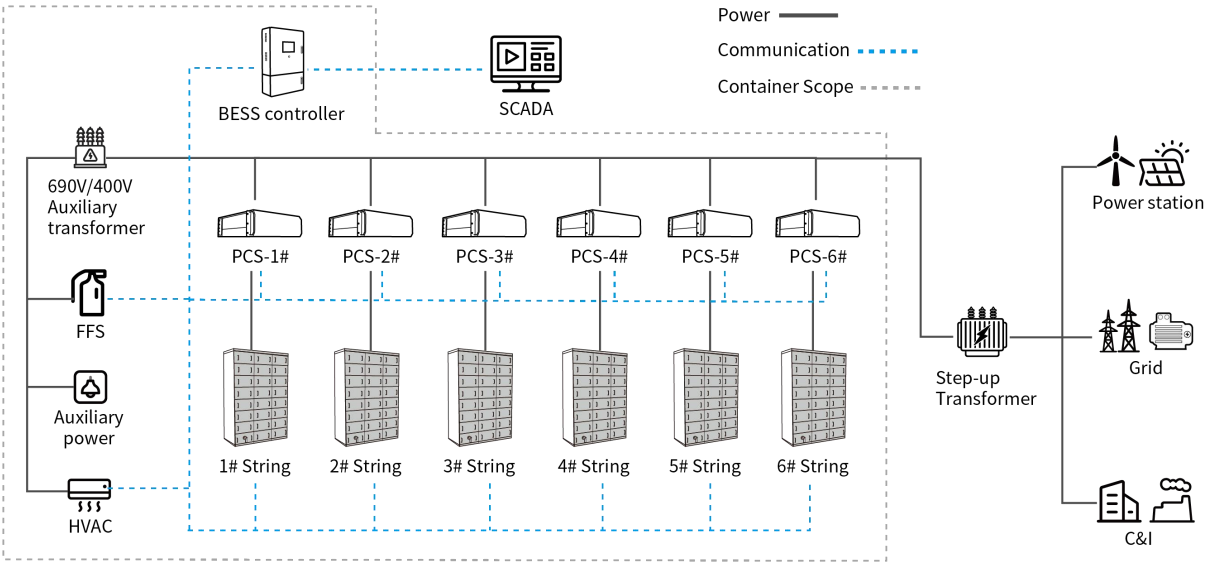

Figure 3-2 System main circuit diagram

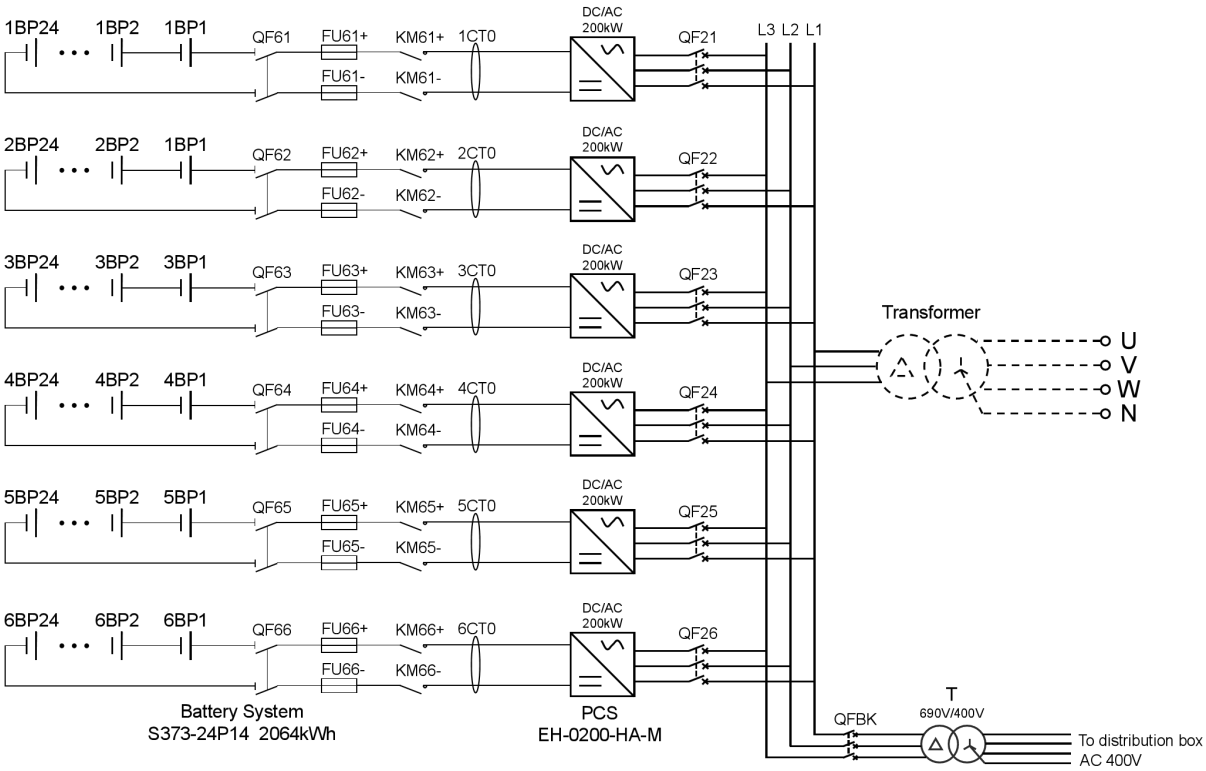

Figure 3-3 Electrical schematic diagram

4. Specifications

4.1. System definition

The 1000 kW/2,064kWh container energy storage system is defined as follows:

Model	AC power(kW)	Battery capacity(kWh)	Space(W×D×H)mm	Weight
PowerCombo-20C2H1200K	1,000	2,064	6,058(D)*2,438(W)*2,591(H) mm	＜26.5t

4.2. Symbol comparison table

Some symbols are used in this agreement and in the display interface, and the corresponding meanings of these symbols are explained in the list :

Symbol	Meaning	Symbol	Meaning
Ie	Rated current	Ue	Rated line voltage
Ia, Ib, Ic	A. B, C three-phase current	Uab, Ubc, Uca	Three phase line voltage
Pn	Rated power	F	Frequency
SOC	Remaining battery capacity	SOH	Battery health
PCS	Power conversion system	BMU	Battery module management unit
CMU	Battery string management unit	BESS controller	GPC control box
QF	DC circuit breaker	KM	DC contactor
S373	Battery string	P14	Battery PACK
FU	DC fuse	FFS	Fire fighting system
HVAC	Air conditioning	DB	Distribution box

4.3. Technical Data

Item		Specification
System	Nominal capacity	1,000kW/2,064kWh
AC Side	Rated AC output power	1,000kW
	Max. AC output power	1,320kVA
	Rated output voltage	690V,
	Output voltage range	586.5~759Vac
	Rated frequency	50/60Hz
	Rated output current	6×167.3Aac
	Adjustable power factor	0.1~1 leading or lagging (Controllable)

	THDi	<1.5% (at rated power)
	Max.efficiency	99%
	Output wiring	3W+PE
DC Side	Rated voltage	1,228.8Vdc
	Lower voltage limit	1,075.2Vdc
	Upper voltage limit	1,363.2Vdc
	Rated current	6*162.7A
	Battery cell capacity	280Ah
	Battery cell QTY	2,304
	Battery pack QTY	144
	Pack	1-parallel and 16-series
	Actual capacity	2,064.384kWh
BESS General	BESS Container dimension	L6,058xW2,438xH2,591mm ISO 20'GP
	BESS weight	~26.5T
	BESS cycles	>5,000cycles, 80%EOL, @25℃
	IP protection	IP54
	Operating temperature range	-10~40℃
	Relative humidity	0~95% (non-condensing)
	Max working altitude	3,000m/9,842ft
	BESS cooling	HVAC, vent function various and optional
	Control system communication	Local Controller gateway, Ethernet
	Certifications	UL9540, IEC62619, UN3536, etc.
	Extra transformer suggestion	≥1500KVA
	Step-up to grid	e.g., 0.690: 10/35KV
	BESS warranty	5,000cycles/5yrs which is first, design life 10yrs.

4.4. Electromagnetic characteristics

Electrostatic immunity test	EN 61000-4-2, Level 3
Radiation immunity test	EN 61000-4-3, Level 3
Electrical fast transient pulse group disturbance resistance test	EN 61000-4-4, Level 4
Surge immunity test(1.2/50 μ s)	EN 61000-4-5, Level 3
Conducted radio frequency interference test	EN 55022, Class B
Radiated radio frequency interference test	EN 55022, Class B
Harmonic current emission limit	EN 61000-3-2, Class A

4.5. Operating environment

a) Operating temperature: -10 ~ +40℃;

b) Storage temperature: -20 ~ +55℃ (Short-term storage: 1 month), 0℃~35℃(long-term storage: 1 year)

c) Relative humidity: No more than 95%, non-condensing;

d) No explosive media shall be allowed in the place of use;

e) No strong acid or alkali and other highly polluting substances that can be adhered to or inhaled by the equipment shall be allowed in the place of use;

f) The container must be horizontally installed on a hardened foundation, with cable slots on the ground for easy routing;

g) Do not install the equipment in low-lying areas to avoid flooding;

h) The container must be placed in a well-ventilated area. No obstacles are allowed within 300mm of the air inlet and outlet.

i) The area around the equipment should be protected according to local requirements to prevent non-personnel from approaching.

j) Lightning protection measures should be placed around the equipment according to local or international standards and lightning protection requirements of the building or power plant equipment.

5. Subsystem Function Description

5.1. Battery system

5.1.1. LFP cell

Figure 5-1 LFP 280K Cell

The system uses lithium iron phosphate capacity battery with aluminum shell, The capacity is 280AH. The technical specifications are as follows:

Item		Spec.	Remarks
Average Capacity		280Ah	(25±2)℃, Standard Charge/Discharge.
Nominal Voltage		3.2V	
Resistance(1KHz)		≤0.25mΩ	
Standard Charge/Discharg	Charge/discharge current	0.5C/0.5C	(25±2)℃
	End-of-charge Voltage	3.65V/2.5V	
Maximum charge/discharge current	Continuous Charge/discharge Current	1C/1C	Refer to continuous/pulse charge/discharge ammeter
	Pulse Charge/discharge Current(60s)	2C/2C	
Recommended SOC Range		10%~90%	N.A.
Operating Temperature under Charging		0℃~55℃	Refer to continuous/pulse charge/discharge ammeter
Operating Temperature under Discharging		-20℃ ~55℃	
Storage Temp.	Short-term(1-month)	-20℃~45℃	N.A.
	Long-term (1-year)	0℃~35℃	
Storage Humidity		<90%	
Monthly self-discharge rate		≤3%/month	(25±2)℃, 30%SOC~50%SOC storage
Size		173.7*72.0*207.5 (mm)	
Battery Cell Weight		5.45±0.30kg	

5.1.2. Battery PACK

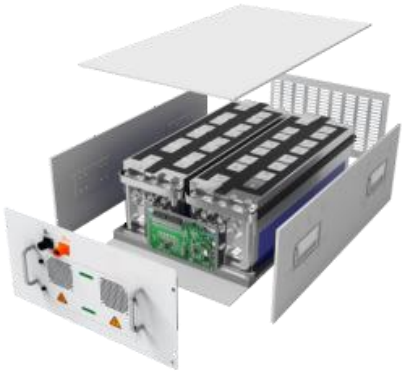

Figure 5-2 P14 battery PACK

Battery PACK properties:

- The integrated BMU and modules are connected in series through copper bars and cables;
- The current current capacity of the positive and negative electrodes is greater than 210 A;
- Battery PACK None External bare live metal components;
- The overall life of the battery PACK is more than 10 years and the cycle life is not less than 5000 times. (With the battery capacity decaying to 80% of the initial as the end of life)

Table 5-1 shows the battery PACK technical data table, and Table 5-2 defines battery PACK ports.

Table 5-1 Battery PACK technical specifications

No.	Item		parameter
1	Battery PACK	nominal capacity	14.336kWh
		cycle life	>5,000 cycle
		nominal voltage	51.2V
		Low pressure limit	44.8V
		High pressure limit	56.8V
		Cell shape	Square
		Cell Capacity	280Ah
		Cell rated voltage	3.2V
		Cell voltage range	2.8V-3.55V
		Cell cycle life	>6,000
		Maximum cell discharge rate	0.5C
		Number of batteries	16
		Number of Battery Modules	2
		Series and parallel mode of cell	1P16S

2	BMU	Voltage sampling time	≤200ms
		Balancing Current	Active balancing, Max 5A
		Cell Voltage Measurement Range	1~4.95 V
		Cell Temperature Measurement Accuracy	±2℃
		Cell Temperature Measurement Interval	≤3s
		Cell Voltage Measurement Accuracy	±2.5mV
		protection parameter	over-temperature protection(<45℃), Low temperature protection (>0℃), over-current protection(250A/1s), short-circuit protection (500A/10ms)
3	weight	Battery PACK	110kg

Battery PACK size(W×D×H): 480mm×750mm×242mm

Table 5-2 Ports on battery pack definition

Ports on the battery pack	Position	Label	Definition
Secondary terminals	1	FAN+	Battery pack FAN power positive
	2	FAN-	Battery pack FAN power negative
	3	CANH	Battery pack CAN communication H
	4	CANL	Battery pack CAN communication L
	5	24V-	Battery pack BMU power negative
	6	24V+	Battery pack BMU power positive
Primary terminals	7	B-	Battery PACK negative pole
	8	B+	Battery PACK positive pole

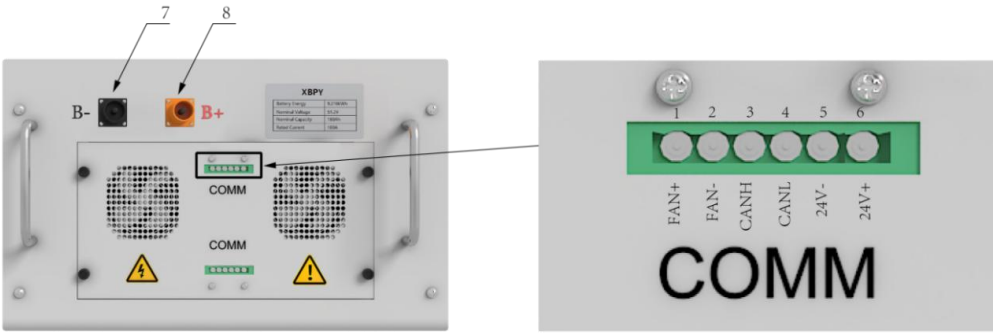

5.1.3. Battery string

A battery string consists of a battery cabinet, battery PACK, and a high voltage unit. Its features are as follows:

- Cabinet frame and metal structure parts meet installation and operation requirements.
- The high voltage unit and battery PACK are modular designed for easy installation and maintenance
- The high voltage unit and battery PACK are both forced air cooled, and the fan is started according to the working state of the system to minimize energy consumption.
- Secure the bottom of the battery cabinet to the bottom of the container using screws.

S373-24P14battery string layout is shown in Figure 5-3 below. After the container is delivered onsite, connect 24 DC power cables to each battery string, As shown in Figure 5-4 below. S373-24P14 the battery string configuration shown in Table 5-3 below:

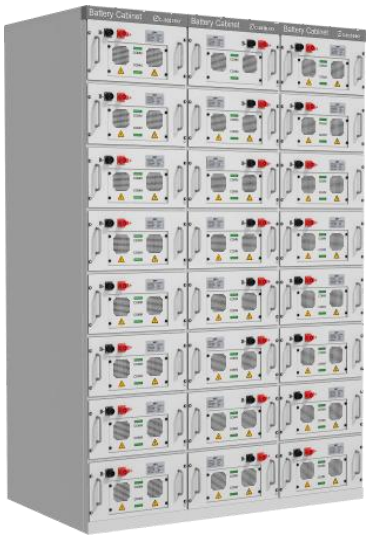

Figure 5-3 Battery string layout of the S373-24P14

(Size: 1440(W) × 750(D) × 2050 (H)).

Figure 5-4 DC cable connection

Table 5-3 20C2H1200K Battery system configuration

NO.	Type	Explain	Qty	Unit
1	20C2H1200K	Contains 6 of S373-24P14 battery string, fan, battery PACK, battery rack, BMS, etc The overall size of the cabinet is 1440*750*2050mm	6	string

Each S373-24P14 Battery string contains components

NO.	Type	Explain	Qty	Unit
1	Battery PACK	Internal integrated battery module, battery PACK sampling unit BMU	24	Set
2	battery rack	Bottom fixed, up to 24 battery packs	1	Set

5.2. DC high voltage unit

The battery string high voltage unit mainly functions as the on-off and on-off control of the battery string and the collection of battery string parameters. Its characteristics are as follows:

- The primary loop uses contactor, fuse and circuit breaker to cooperate with each other to protect the battery string reliably.
- The CMU is integrated in the box. As a secondary BMS, the CMU collects the data of the BMU of each battery management unit to realize real-time monitoring and protection of the whole string of batteries and timely communication.
- The control power supply in the box adopts the redundant design of AC and DC power supply, which supports the black start of the system.
- Adopt both reliability and speed communication mode. The important battery information is uploaded by dry contact, and other information is uploaded by Modbus.

Table 5-4 describes the parameters of the high-voltage unit. Table 5-5 defines the terminals of the high-voltage unit

Table 5-4 High voltage unit parameter

No.	Item		Specification
1	Basic parameter	DC voltgae range	30~1500V
		Max current	210A
		Weight	30kg
		Monitoring parameter	Battery string voltage and current
		Function	Contactor control, short circuit protection
		Communication mode	CAN/TCP
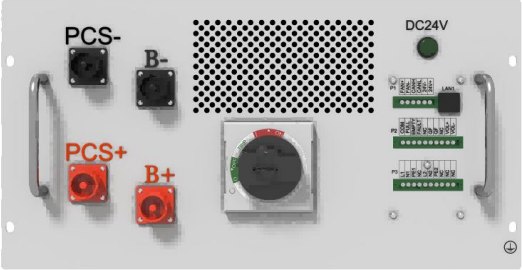			DC24V:Battery string DC24V power indicator; QF6: Battery string DC circuit breaker; Size (W x H x D, mm): 480×242×750.

Table 5-5 Definitions of high-voltage unit terminals

Ports	Symbol		Specification
Power port	PCS +		Connect to the positive terminal DC side of PCS
	PCS -		Connect to the negative DC side of PCS
	B+		Connect to the positive DC side of XBP24
	B-		Connect to the negative DC side of XBP1
PDN	P1	FAN+	Battery module Internal DC24V fan power +
		FAN-	Battery module Internal DC24V fan power supply -
		CANH	CAN communication of battery module Internal battery management unit BMU H
		CANL	CAN communication of battery module Internal battery management unit BMU L
		+24V	Battery module Internal battery management unit DC24V+ of the BMU
		-24V	Battery module Internal battery management unit DC24V- of the BMU
	P2	COM	Passive DO signal common end

	FULL	Battery string is filled with passive DO
	EMPTY	Battery string empties the passive DO
	FAULT	Battery string fault passive DO
	NC	NC
	QF	External trip high voltage unit passive DI
	QF	External trip high voltage unit passive DI
	NC	NC
	VOL+	Battery string voltage AO+
	VOL-	Battery string voltage AO-
P3	L1	high voltage unit AC220V power supply ~L
	N1	high voltage unit AC220V power supply ~N
	PE1	high voltage unit is grounded
	NC	NC
	L2	NC
	N2	NC
	PE2	NC
	NC	NC
	NC	NC
	NC	NC
LAN1		Communication RJ45 network port

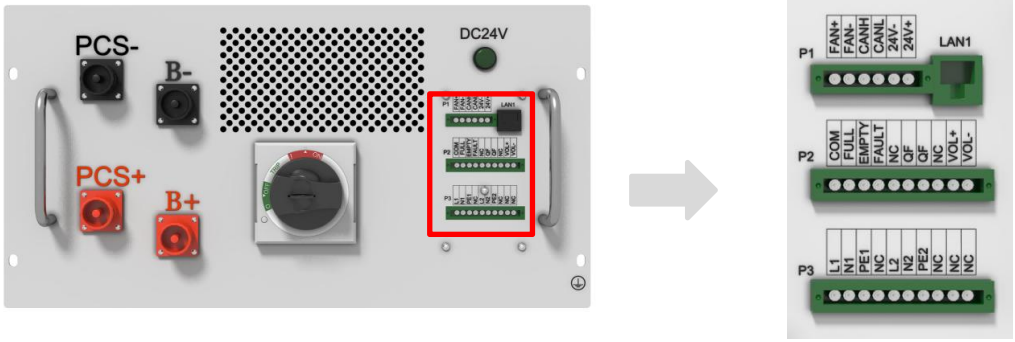

5.3. Battery Management System (BMS)

The battery management System BMS is composed of battery pack management unit BMU and battery string management unit CMU.

BMS system has the functions of high-precision detection and reporting of analog signals, fault alarm, upload and storage, battery protection, parameter setting, passive equalization, battery pack SOC calibration and information interaction with other equipment.Main features of battery management system.

- Carry out comprehensive detection of battery operation status, including voltage, current, temperature, etc;
- High accuracy of single battery voltage detection: ± 5mv, ensuring the reliability of system data analysis;
- Multi point temperature monitoring to avoid battery thermal runaway and ensure system safety;
- Passive equalization mode, effectively delaying battery life;
- Modular design, strong scalability;
- Complete and reliable battery protection function;

The technical specifications of BMU and CMU are shown in the table below:

Item	Specification
BMU	
Operating voltage range (V / DC)	18~32
Normal working current (A)	0.03
Number of battery detection strings	16
Temperature detection points	10(8-way battery package temperature + 2-way connection pole temperature)
Cell Voltage Measurement Accuracy	±5 mV
Cell Temperature Measurement Accuracy	±2℃
Cell Balancing Current	5A MAX
Operating temperature range	-20℃~55℃
Balancing Method	Active equalization
BMS Insulation Voltage	All internal cables to shell: 3kVac, 1 minute, no arcing
CMU	
Operating voltage range (V / DC)	18~36
Normal working current (A)	0.1
String Voltage Measurement Range	100~1500 V
String Voltage Measurement Accuracy	±1%
String Current Measurement Range	±300 A
String Current Measurement Accuracy	1%
Temperature measurement range	-40℃~125 ℃
Operating temperature range	-20℃~55℃
SOC Calculation Accuracy	≤8%
Insulation Monitoring Resolution	10 kΩ

5.4. BESS controller

Figure 5-2 BESS controller

BESS controller is a device that realizes system working state control, DC grid-connected control, protection and data exchange, and is the core center of energy storage system operation.

Main features of the device:

- Condition monitoring: the controller monitors the battery module voltage, temperature, group voltage, current, DC power, grid connected AC power, environmental state, inverter state, fire state and other states in real time, and comprehensively monitors the operating parameters of the energy storage system;
- Battery management: the controller manages the battery operation data in real time, counts the maximum / minimum voltage, maximum / minimum temperature, SOC, voltage difference and other information, and gives the battery operation, alarm status and other signals in real time.
- Control and protection: including rich control functions: switch control, grid connection control, charge and discharge control, automatic temperature regulation, etc; It has multiple protection functions: over voltage / under voltage protection, high temperature / low temperature protection, over current protection, short circuit protection, leakage protection, reverse power protection, communication protection, etc;
- String battery DC grid-connected logic control, internal subsystems coordinated control linkage, including fire protection linkage BMS shutdown, etc
- Collect and process DC and AC side data and upload them, and accept the control instructions of external EMS dispatching system;

5.5. Power distribution box

The distribution box is the AC output port of the system and is connected to the power grid through an external transformer or a voltage booster box. It contains the primary AC switch of the system and the bronze wire outlet, the power switch of the secondary equipment and the reserved communication and acquisition terminal.

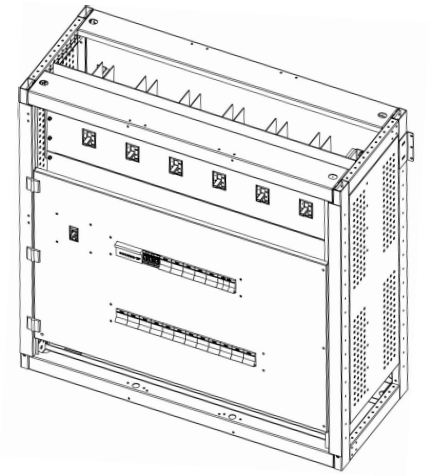

Figure 5-3 Power distribution box

5.6. Environment control system

The environmental control inside the container adopts precision air conditioner design to ensure ideal indoor temperature during high-rate discharging. The selected precision air conditioner is suitable for applications where the container internal equipment produces much heat meanwhile being sensitive to ambient temperature and where the inside needs to be completely separated from the outside. It is highly reliable and easy to install, with comprehensive functions and can work immediately after power-on without complicated commissioning. For indoor circulation, the air conditioner takes in hot air from the top and returns cold air to the bottom; and for outdoor circulation, it takes cooler air from the bottom for heat exchange and exhaust hot air upwards.

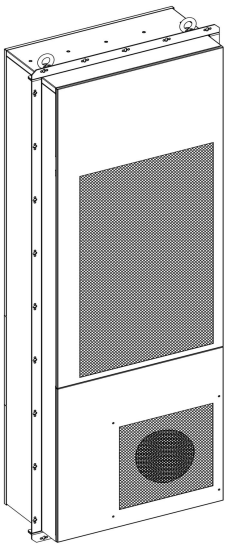

Figure 5-4 Air conditioning appearance

Table 5-6 Air conditioning specifications

Parameter		MC50HDNC1A
Size, quality & Installation		
Dimensions (H x W x D)	mm	1350×620×300
Dimensions (H x W x D) including flange	mm	1401×671×300
Weight	kg	90
Install		Door Mounted
Application environment		Outdoor
Environmental protection& performance		
Work environment	℃	-40 to +55
Noise grade	dB(A)	65
IP protection level		IP 55
Refrigerating fluid		R134a
RoHS certification		Yes
Cooling capacity @L35/L35	W	5000
Heating capacity(Optional)	W	3000
Power		
Input power@L35/L35	W	1850
Input Current@L35/L35	A	8.50
Air Volume		
Cabinet Air Volume	m3/h	1400
Power system		
Power range	V, Hz	220±15%,50
Nominal voltage	V, Hz	220, 50
MAX current	A	11.0

5.6.1. Function description:

The operation of the air conditioner is automatically controlled according to the temperature inside the container battery compartment. The controller detects the return air temperature in the compartment through the internal circulation temperature sensor, compares it with the set point, and controls the operation of the compressor or fan.

➢ Cooling

Cooling start = set point + return difference, when the container internal temperature exceeds the cooling start point, the cooling starts; and when the temperature drops below the cooling set point, the cooling stops.

Parameter	Default	Range of Setting	Unit
Cooling Set Point	25	[15 ~ 50]	℃
Return Difference	10	[1~10]	℃

➢ Heating

Heating start = set point - return difference, when the contain internal temperature is lower than the heating start point, the heating starts; and when the temperature rises above the heating set point, the heating stops.

Parameter	Default	Range of Setting	Unit
Heating Set Point	15	[-15~15]	℃
Return Difference	10	[1 ~ 10]	℃

➢ Dehumidification

Dehumidification start = set point + return difference, when the contain internal humidity is higher than the dehumidification start point, the dehumidification starts; and when the humidity is lower than the dehumidification set point, the dehumidification stops.

Parameter	Default	Range of Setting	Unit
Dehumidification Set Point	60	[40 ~90]	The humidity when dehum stops
Return Difference	10	[1 ~30]	The sens. of humidity control

5.7. Fire fighting system

Figure 5-5 Fire fighting system components

The fire fighting system is designed according to the specification and size of the 1MW/2.064MWh 20-foot container. The fire extinguishing agent is transported from the fire extinguishing agent cylinder group through the main pipe and branch pipe to the nozzle of the container battery room to achieve the fire extinguishing function.

The system includes gas cylinder, fire extinguishing agent, solenoid valve, pressure feedback device, fire fighting control system, etc.

The fire control system is mainly composed of fire detector (temperature and smoke), audible and visual alarm device, emergency start and stop button, air release indicator, fire controller, etc.

The combustible gas detector is separately configured to detect the concentration of hydrogen and carbon monoxide in the battery room, and the signal is transmitted to BESS. At the same time, the container is equipped with pressure relief device, air inlet and exhaust fan.

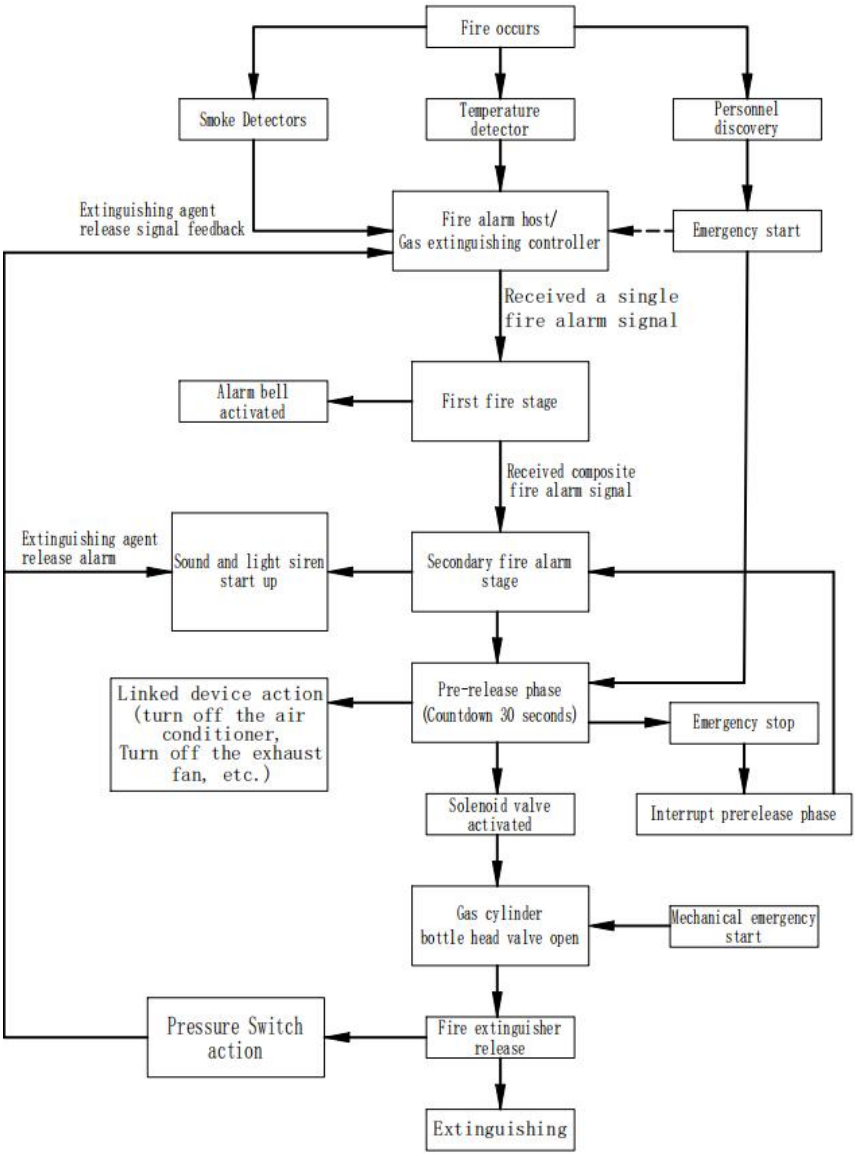

Figure 5-9 Fire fighting system action logic

This system has two control modes: automatic and electrical manual. There are two independent detection circuits in each protection area. When the first fire signal is given, an alarm will be issued, indicating the location of the fire and reminding the staff to pay attention. When the first 2 detector also signal fire, automatic fire extinguishing controller began to delay phase (0 to 30 s adjustable), after a time delay, open the solenoid valve, solenoid valve needle start bottle storage cylinder head valve, the fire area fire fighting operations, at the same time receive the feedback signal from the pressure switch alarm controller, control panel discharge indicator; When the alarm controller is in the manual state, the alarm controller only sends out alarm signals and does not output action signals. After the on-duty personnel confirm the fire alarm, press the emergency start button on the alarm control panel or the emergency start and stop button at the entrance of the protection area to start the system and spray fire extinguishing agent.

5.8. Power Conversion System (PCS)

Energy storage bidirectional converter is a device to realize bidirectional energy conversion between battery and AC grid. Its core part is a 3-level high efficiency converter composed of power electronic devices IGBT and the corresponding embedded control software.

Modular power converter PCS main features:

- Three-level topology, up to 99% conversion efficiency, better power quality
- Integrated string-level battery management function, high battery availability
- Intelligent multi-stage fan speed regulation, wide temperature operation capacity, 50°C no derating
- Support constant power, constant current, constant voltage control, with a frequency modulation, VSG and other functions
- Support IEC61850 protocol, with MS-level responsiveness
- IP66 protection, outdoor can be installed vertically and horizontally

Figure 5-10 Modular power conversion system

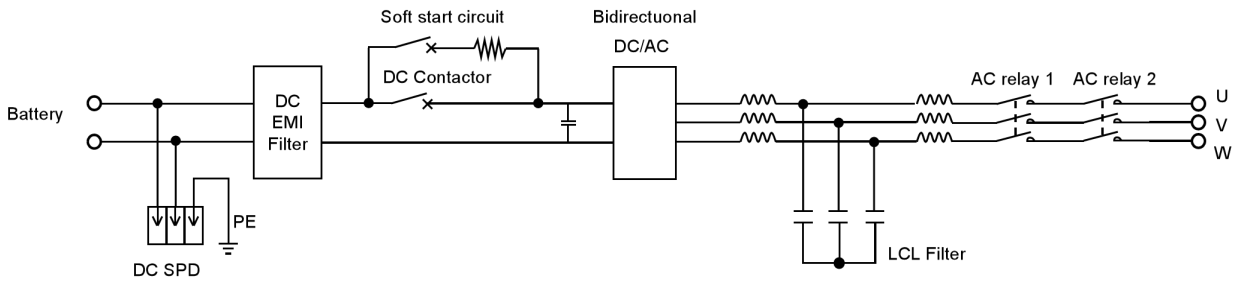

Figure 5-11 Electrical schematic diagram

Main specifications are shown as below

Item		Description
Battery DC side	Max. DC voltage	1,500Vdc
	Max. DC current	224.5Adc
	Battery system voltage range	1,000-1,500Vdc
Grid AC side	Rated power	200kW
	Max. AC power	220kW
	Rated grid voltage	690Vac, 3W+PE
	Grid voltage range	586.5~759V(settable)
	Max. AC current	184.1Aac
	Rated grid frequency	50/60Hz
	THDi	<1.5%
	AC PF	-1~+1
System characteristic	Isolated	None
	Max. efficiency	99%
	IP protection	IP66
	Operation temperature	-40~+60℃
	Allowable humidity range	0~100% (no condensation)
	Maximum operating altitude	4,000m
	Cooling	Temperature controlled forced air cooling
	Communication Interface	RS485/CAN/Ethernet
	Dimension	W880×H275×D865mm
	Weight	100kg

6. Energy storage container design

1. 20 ft (6,058 L x2,438 W x2,591 h mm) standard containers are used for this project, which meet ISO shipping container requirements, meet lifting requirements, provide shipping container certificate and have a service life of not less than 10 years;
2. LOGO painting can be performed on the appearance of containers according to customer requirements. The LOGO design must be provided before equipment production;
3. Container with reinforced steel bar, outer steel plate using Corten steel (high weathering steel), protection grade IP54, container exterior coating use C4 level anti-corrosion process; The battery compartment uses 50mm rock wool insulation layer;
4. Symmetrical ground poles are provided at each corner of the container;
5. The battery compartment of the container is designed for external maintenance to facilitate external maintenance of batteries, air conditioners, and other devices, avoiding security risks when maintenance personnel enter the battery compartment;

7. Technical services

Party B makes the following technical service commitments to Party A's users regarding the products and equipment produced:

1. Guide Party A to start up and test run according to Party B's technical data and operation manual;
2. After receiving the after-sales application, Party A shall be provided with remote after-sales guidance free of charge.
3. For the auxiliary equipment related to the contract equipment purchased by Party A, Party B shall voluntarily provide the technical conditions and materials that meet the equipment interface requirements;
4. Provide training for Party A's technical personnel during equipment acceptance, so that Party A's personnel can master the operation and daily maintenance of the equipment.

8. Other

This Agreement shall come into force upon being signed and affixed with official seals by authorized representatives of both parties. This Agreement is made in duplicate, with each party holding one copy.

(Blank)

Part A: XXXXXXXXXXXXXXXXX

Representative:

Date:

Part B: Shenzhen Cubenergy Co., Ltd

Representative:

Date: